RANGEHOOD
COLLECTION

Quiet powerful rangehoods

amoré

FS

Amore Quiet Rangehoods

At the heart of every culture is a simple belief:
Food brings people together.

Whether it’s a family dinner, a celebration with friends,
or a quiet meal for two, the kitchen is where love lives.

Amore Quiet Rangehoods are crafted with that spirit in mind.

Beautifully designed to powerfully remove steam and cooking odours while preserving a peaceful atmosphere. Amore works quietly in the background so you can focus on what matters most.

Connection. Comfort. Shared moments.

Designed for your lifestyle

Amore offers a carefully curated selection of rangehoods designed to match your lifestyle and design preferences.

Each model features ultra-quiet operation while effectively removing steam, smoke and grease from your kitchen, ensuring a clean, healthy and comfortable environment in your home.

Wall-Mount

Undermount

Island & Ceiling Mount

BBQ

Amore external motors quietly remove noise, smoke, steam and odours leaving your home hygienic and clean

Lucia

900mm Undermount Rangehood

The Lucia 900mm undermount rangehood is ideal for up to a 900mm wide cooktop and fits discreetly into your kitchen cabinetry and can be paired with the motor that is right for your level of cooking.

Specifications

- Quiet Operation with External Motor
- Expel smoke, grease, smells & steam outside
- Easy control with soft-touch eye-level controls
- Great Control with 5-Speed Levels
- 15-minute delay timer with auto shut-off
- Twin LED lights give you great stovetop lighting
- Sturdy hood made of 1mm 430 stainless steel
- Stainless steel dishwasher-safe filters
- Remote control for optimum convenience
- Dimensions: 897mm wide x 294mm deep
- Includes 5m ducting
- Full dimensions at back of this catalogue
- 5-Year in-home warranty on hood
- 10-Year in-home warranty on motor

Rangehood + Motor Systems

Amore rangehoods are powered by an external EX-Drive motor. Choose the right one for your kitchen.

Lucia 900mm Rangehood 900 EX-Drive Motor™

RRP $2,035

Ideal for normal cooking

Product Code: UMLUCIA9-M9

Lucia 900mm Rangehood 1600 EX-Drive Motor™

RRP $2,200

Ideal for heavy cooking

Product Code: UMLUCIA9-M16

Lucia 900mm Rangehood 3200 EX-Drive Motor™

RRP $3,740

Ideal for extreme cooking

Product Code: UMLUCIA9-M32

Optional Accessories

Enhance your system with these add-ons.

DuraDuct 200mm Ducting (5m)

RRP $299

Product Code: DURA200

Lucia 900mm Baffles (Set of 3)

RRP $34.50 (Each Baffle)

Product Code: LUCIA9BAF

Lucia

600mm Undermount Rangehood

The Lucia 600mm undermount rangehood is ideal for up to a 600mm wide cooktop and fits discreetly into your kitchen cabinetry and can be paired with the motor that is right for your level of cooking.

Specifications

- Quiet operation with external motor
- Expel smoke, grease, smells & steam outside
- Easy control with soft-touch eye-level controls
- Great control with 5-speed levels
- 15-minute delay timer with auto shut-off
- Twin LED lights give you great stovetop lighting
- Sturdy hood made of 1mm 430 stainless steel
- Stainless steel dishwasher-safe filters
- Remote control for optimum convenience
- Dimensions: 597mm wide x 294mm deep
- Includes 5m ducting
- Full dimensions at back of this catalogue
- 5-Year in-home warranty on hood
- 10-Year in-home warranty on motor

Rangehood + Motor Systems

Amore rangehoods are powered by an external EX-Drive motor. Choose the right one for your kitchen.

Lucia 600mm Rangehood 900 EX-Drive Motor™

RRP $1,900

Ideal for normal cooking

Product Code: UMLUCIA6-M9

Lucia 600mm Rangehood 1600 EX-Drive Motor™

RRP $2,090

Ideal for heavy cooking

Product Code: UMLUCIA6-M16

Optional Accessories

Enhance your system with these add-ons.

DuraDuct 200mm Ducting (5m)

RRP $299

Product Code: DURA200

Lucia 600mm Baffles (Set of 2)

RRP $34.50 (Each Baffle)

Product Code: LUCIA6BAF

Black

Lucia

900mm Undermount Rangehood

The Lucia Black 900mm undermount rangehood is ideal for up to a 900mm wide cooktop and fits discreetly into your kitchen cabinetry and can be paired with the motor that is right for your level of cooking.

Specifications

- Quiet operation with external motor
- Expel smoke, grease, smells & steam outside
- Easy control with soft-touch eye-level controls
- Great control with 5-speed levels
- 15-minute delay timer with auto shut-off
- Twin LED lights give you great stovetop lighting
- Sturdy hood made of 1mm 430 stainless steel
- Stainless steel dishwasher-safe filters
- Remote control for optimum convenience
- Dimensions: 897mm wide x 294mm deep
- Includes 5m ducting
- Full dimensions at back of this catalogue
- 5-Year in-home warranty on hood
- 10-Year in-home warranty on motor

Rangehood + Motor Systems

Amore rangehoods are powered by an external EX-Drive motor. Choose the right one for your kitchen.

Lucia Black 900mm Rangehood 900 EX-Drive Motor™

RRP $2,035

Ideal for normal cooking

Product Code: UMLUCIA9B-M9

Lucia Black 900mm Rangehood 1600 EX-Drive Motor™

RRP $2,200

Ideal for heavy cooking

Product Code: UMLUCIA9B-M16

Lucia Black 900mm Rangehood 3200 EX-Drive Motor™

RRP $3,740

Ideal for extreme cooking

Product Code: UMLUCIA9B-M32

Optional Accessories

Enhance your system with these add-ons.

DuraDuct 200mm Ducting (5m)

RRP $299

Product Code: DURA200

Lucia Black 900mm Baffles (Set of 3)

RRP $34.50 (Each Baffle)

Product Code: LUCIA9BBAF

Black

Lucia

600mm Undermount Rangehood

The Lucia Black 600mm undermount rangehood is ideal for up to a 600mm wide cooktop and fits discreetly into your kitchen cabinetry and can be paired with the motor that is right for your level of cooking.

Specifications

- Quiet Operation with External Motor
- Expel smoke, grease, smells & steam outside
- Easy control with soft-touch eye-level controls
- Great control with 5-speed levels
- 15-minute delay timer with auto shut-off
- Twin LED lights give you great stovetop lighting
- Sturdy hood made of 1mm 430 stainless steel
- Stainless steel dishwasher-safe filters
- Remote control for optimum convenience
- Dimensions: 597mm wide x 294mm deep
- Includes 5m ducting
- Full dimensions at back of this catalogue
- 5-Year in-home warranty on hood
- 10-Year in-home warranty on motor

Rangehood + Motor Systems

Amore rangehoods are powered by an external EX-Drive motor. Choose the right one for your kitchen.

Lucia Black 600mm Rangehood 900 EX-Drive Motor™

RRP $1,900

Ideal for normal cooking

Product Code: UMLUCIA6B-M9

Lucia Black 600mm Rangehood 1600 EX-Drive Motor™

RRP $2,090

Ideal for heavy cooking

Product Code: UMLUCIA6B-M16

Optional Accessories

Enhance your system with these add-ons.

DuraDuct 200mm Ducting (5m)

RRP $299

Product Code: DURA200

Lucia Black 600mm Baffles (Set of 2)

RRP $34.50 (Each Baffle)

Product Code: LUCIA6BBAF

Sofia

900mm Undermount Rangehood

The Sofia 900mm wide undermount rangehood is ideal for up to a 900mm wide cooktop and integrates seamlessly into your kitchen cabinetry and can be paired with a motor that suits your cooking needs.

Specifications

- Quiet operation with external motor
- Expel smoke, grease, smells & steam outside
- Easy control with soft-touch eye-level controls
- Great control with 5-speed levels
- 15-minute delay timer with auto shut-off
- Twin LED lights give you great stovetop lighting
- Sturdy hood made of 1mm 430 stainless steel
- Stainless steel dishwasher-safe filters
- Remote control for optimum convenience
- Dimensions: 863mm wide x 294mm deep
- Includes 5m ducting
- Full dimensions at back of this catalogue
- 5-Year in-home warranty on hood
- 10-Year in-home warranty on motor

Rangehood + Motor Systems

Amore rangehoods are powered by an external EX-Drive motor. Choose the right one for your kitchen.

Sofia 900mm Rangehood 900 EX-Drive Motor™

RRP $2,295

Ideal for normal cooking

Product Code: UMSOFIA9-M9

Sofia 900mm Rangehood 1600 EX-Drive Motor™

RRP $2,415

Ideal for heavy cooking

Product Code: UMSOFIA9-M16

Sofia 900mm Rangehood 3200 EX-Drive Motor™

RRP $3,895

Ideal for extreme cooking

Product Code: UMSOFIA9-M32

Optional Accessories

Enhance your system with these add-ons.

DuraDuct 200mm Ducting (5m)

RRP $299

Product Code: DURA200

Sofia 900mm Baffles (Set of 2)

RRP $34.50 (Each Baffle)

Product Code: SOFIA9BAF

Sofia

750mm Undermount Rangehood

The Sofia 750mm wide undermount rangehood is ideal for up to a 750mm wide cooktop and integrates seamlessly into your kitchen cabinetry and can be paired with a motor that suits your cooking needs.

Specifications

- Quiet operation with external motor
- Expel smoke, grease, smells & steam outside
- Easy control with soft-touch eye-level controls
- Great control with 5-speed levels
- 15-minute delay timer with auto shut-off
- Twin LED lights give you great stovetop lighting
- Sturdy hood made of 1mm 430 stainless steel
- Stainless steel dishwasher-safe filters
- Remote control for optimum convenience
- Dimensions: 700mm wide x 294mm deep
- Includes 5m ducting
- Full dimensions at back of this catalogue
- 5-Year in-home warranty on hood
- 10-Year in-home warranty on motor

Rangehood + Motor Systems

Amore rangehoods are powered by an external EX-Drive motor. Choose the right one for your kitchen.

Sofia 750mm Rangehood 900 EX-Drive Motor™

RRP $2,000

Ideal for normal cooking

Product Code: UMSOFIA75-M9

Sofia 750mm Rangehood 1600 EX-Drive Motor™

RRP $2,200

Ideal for heavy cooking

Product Code: UMSOFIA75-M16

Sofia 750mm Rangehood 3200 EX-Drive Motor™

RRP $3,395

Ideal for extreme cooking

Product Code: UMSOFIA75-M32

Optional Accessories

Enhance your system with these add-ons.

DuraDuct 200mm Ducting (5m)

RRP $299

Product Code: DURA200

Sofia 750mm Baffles (Set of 2)

RRP $34.50 (Each Baffle)

Product Code: SOFIA75BAF

Sofia

600mm Undermount Rangehood

The Sofia 600mm undermount rangehood is ideal for up to a 600mm wide cooktop integrating seamlessly into your kitchen cabinetry and can be paired with a motor that suits your cooking needs.

Specifications

- Quiet operation with external motor
- Expel smoke, grease, smells & steam outside
- Easy control with soft-touch eye-level controls
- Great control with 5-speed levels
- 15-minute delay timer with auto shut-off
- Twin LED lights give you great stovetop lighting
- Sturdy hood made of 1mm 430 stainless steel
- Stainless steel dishwasher-safe filters
- Remote control for optimum convenience
- Dimensions: 602mm wide x 294mm deep
- Includes 5m ducting
- Full dimensions at back of this catalogue
- 5-Year in-home warranty on hood
- 10-Year in-home warranty on motor

Rangehood + Motor Systems

Amore rangehoods are powered by an external EX-Drive motor. Choose the right one for your kitchen.

Sofia 600mm Rangehood 900 EX-Drive Motor™

RRP $1,900

Ideal for normal cooking

Product Code: UMSOFIA6-M9

Sofia 600mm Rangehood 1600 EX-Drive Motor™

RRP $2,090

Ideal for heavy cooking

Product Code: UMSOFIA6-M16

Optional Accessories

Enhance your system with these add-ons.

DuraDuct 200mm Ducting (5m)

RRP $299

Product Code: DURA200

Sofia 600mm Baffles (Set of 2)

RRP $34.50 (Each Baffle)

Product Code: SOFIA6BAF

Nova

900mm Undermount Rangehood

The Nova 900mm wide black glass undermount rangehood is ideal for up to a 900mm wide cooktop and integrates seamlessly into your kitchen cabinetry and can be paired with a motor that suits your cooking needs.

Specifications

- Quiet operation with external motor
- Expel smoke, grease, smells & steam outside
- Black Glass Panel with Touch Controls
- Great control with 5-speed levels
- 15-minute delay timer with auto shut-off
- Twin LED lights give you great stovetop lighting
- Sturdy hood made of 1mm 430 stainless steel
- Stainless steel dishwasher-safe filters
- Dimensions: 863mm wide x 296mm deep
- Includes 5m ducting
- Full dimensions at back of this catalogue
- 5-Year in-home warranty on hood
- 10-Year in-home warranty on motor

Rangehood + Motor Systems

Amore rangehoods are powered by an external EX-Drive motor. Choose the right one for your kitchen.

Nova 900mm Rangehood 900 EX-Drive Motor™

RRP $1,799

Ideal for normal cooking

Product Code: UMNOVA9-M9

Nova 900mm Rangehood 1600 EX-Drive Motor™

RRP $1,999

Ideal for heavy cooking

Product Code: UMNOVA9-M16

Nova 900mm Rangehood 3200 EX-Drive Motor™

RRP $2,999

Ideal for extreme cooking

Product Code: UMNOVA9-M32

Optional Accessories

Enhance your system with these add-ons.

DuraDuct 200mm Ducting (5m)

RRP $299

Product Code: DURA200

Valentina

1200mm Undermount Rangehood

The Valentina 1200mm wide undermount rangehood is designed with a deeper profile than the Lucia model to improve extraction performance. Perfect for cooktops up to 1200mm wide, it blends seamlessly into your kitchen cabinetry and can be matched with a motor to suit your cooking style.

Specifications

- Quiet operation with external motor
- Expel smoke, grease, smells & steam outside
- Easy control with soft-touch eye-level controls
- Great control with 5-speed levels
- 15-minute delay timer with auto shut-off
- Twin LED lights give you great stovetop lighting
- Sturdy hood made of 1mm 430 stainless steel
- Stainless steel dishwasher-safe filters
- Dimensions: 1200mm wide x 390mm deep
- Includes 5m ducting
- Full dimensions at back of this catalogue
- 5-Year in-home warranty on hood
- 10-Year in-home warranty on motor

Rangehood + Motor Systems

Amore rangehoods are powered by an external EX-Drive motor. Choose the right one for your kitchen.

Valentina 1200mm Rangehood 1600 EX-Drive Motor™

RRP $2,495

Ideal for heavy cooking

Product Code: UMVTINA12-M16

Valentina 1200mm Rangehood 3200 EX-Drive Motor™

RRP $3,495

Ideal for extreme cooking

Product Code: UMVTINA12-M32

Optional Accessories

Enhance your system with these add-ons.

DuraDuct 200mm Ducting (5m)

RRP $299

Product Code: DURA200

Valentina 1200mm Baffles (Set of 4)

RRP $34.50 (Each Baffle)

Product Code: VTINA12BAF

Valentina

900mm Undermount Rangehood

The Valentina 900mm wide undermount rangehood is designed with a deeper profile than the Lucia model to improve extraction performance. Perfect for cooktops up to 900mm wide, it blends seamlessly into your kitchen cabinetry and can be matched with a motor to suit your cooking style.

Specifications

- Quiet operation with external motor
- Expel smoke, grease, smells & steam outside
- Easy control with soft-touch eye-level controls
- Great control with 5-speed levels
- 15-minute delay timer with auto shut-off
- Twin LED lights give you great stovetop lighting
- Sturdy hood made of 1mm 430 stainless steel
- Stainless steel dishwasher-safe filters
- Dimensions: 900mm wide x 390mm deep
- Includes 5m ducting
- Full dimensions at back of this catalogue
- 5-Year in-home warranty on hood
- 10-Year in-home warranty on motor

Rangehood + Motor Systems

Amore rangehoods are powered by an external EX-Drive motor. Choose the right one for your kitchen.

Valentina 900mm Rangehood 900 EX-Drive Motor™

RRP $1,895

Ideal for normal cooking

Product Code: UMVTINA9-M9

Valentina 900mm Rangehood 1600 EX-Drive Motor™

RRP $2,295

Ideal for heavy cooking

Product Code: UMVTINA9-M16

Valentina 900mm Rangehood 3200 EX-Drive Motor™

RRP $3,295

Ideal for extreme cooking

Product Code: UMVTINA9-M32

Optional Accessories

Enhance your system with these add-ons.

DuraDuct 200mm Ducting (5m)

RRP $299

Product Code: DURA200

Valentina 900mm Baffles (Set of 3)

RRP $34.50 (Each Baffle)

Product Code: VTINA9BAF

Valentina

600mm Undermount Rangehood

The Valentina 600mm wide undermount rangehood is designed with a deeper profile than the Lucia model to improve extraction performance. Perfect for cooktops up to 600mm wide, it blends seamlessly into your kitchen cabinetry and can be matched with a motor to suit your cooking style.

Specifications

- Quiet operation with external motor
- Expel smoke, grease, smells & steam outside
- Easy control with soft-touch eye-level controls
- Great control with 5-speed levels
- 15-minute delay timer with auto shut-off
- Twin LED lights give you great stovetop lighting
- Sturdy hood made of 1mm 430 stainless steel
- Stainless steel dishwasher-safe filters
- Dimensions: 600mm wide x 390mm deep
- Includes 5m ducting
- Full dimensions at back of this catalogue
- 5-Year in-home warranty on hood
- 10-Year in-home warranty on motor

Rangehood + Motor Systems

Amore rangehoods are powered by an external EX-Drive motor. Choose the right one for your kitchen.

Valentina 600mm Rangehood 900 EX-Drive Motor™

RRP $1,775

Ideal for normal cooking

Product Code: UMVTINA6-M9

Valentina 600mm Rangehood 1600 EX-Drive Motor™

RRP $1,999

Ideal for heavy cooking

Product Code: UMVTINA6-M16

Optional Accessories

Enhance your system with these add-ons.

DuraDuct 200mm Ducting (5m)

RRP $299

Product Code: DURA200

Valentina 600mm Baffles (Set of 2)

RRP $34.50 (Each Baffle)

Product Code: VTINA6BAF

Bella

1200mm Undermount Rangehood

The Bella 1200mm wide undermount rangehood is designed with a deeper profile than the Lucia model to improve extraction performance. Perfect for cooktops up to 1200mm wide, it blends seamlessly into your kitchen cabinetry and can be matched with a motor to suit your cooking style.

Specifications

- Quiet operation with external motor
- Expel smoke, grease, smells & steam outside
- Easy control with soft-touch eye-level controls
- Great control with 5-speed levels
- 15-minute delay timer with auto shut-off
- Twin LED lights give you great stovetop lighting
- Sturdy hood made of 1mm 430 stainless steel
- Stainless steel dishwasher-safe filters
- Dimensions: 1200mm wide x 390mm deep
- Includes 5m ducting
- Full dimensions at back of this catalogue
- 5-Year in-home warranty on hood
- 10-Year in-home warranty on motor

Rangehood + Motor Systems

Amore rangehoods are powered by an external EX-Drive motor. Choose the right one for your kitchen.

Bella 1200mm Rangehood 1600 EX-Drive Motor™

RRP $2,495

Ideal for heavy cooking

Product Code: UMBELLA12-M16

Bella 1200mm Rangehood 3200 EX-Drive Motor™

RRP $3,495

Ideal for extreme cooking

Product Code: UMBELLA12-M32

Optional Accessories

Enhance your system with these add-ons.

DuraDuct 200mm Ducting (5m)

RRP $299

Product Code: DURA200

Bella 1200mm Baffles (Set of 4)

RRP $34.50 (Each Baffle)

Product Code: BELLA12BAF

Bella

900mm Undermount Rangehood

The Bella 900mm wide undermount rangehood is designed with a deeper profile than the Lucia model to improve extraction performance. Perfect for cooktops up to 900mm wide, it blends seamlessly into your kitchen cabinetry and can be matched with a motor to suit your cooking style.

Specifications

- Quiet operation with external motor
- Expel smoke, grease, smells & steam outside
- Easy control with soft-touch eye-level controls
- Great control with 5-speed levels
- 15-minute delay timer with auto shut-off
- Twin LED lights give you great stovetop lighting
- Sturdy hood made of 1mm 430 stainless steel
- Stainless steel dishwasher-safe filters
- Dimensions: 900mm wide x 390mm deep
- Includes 5m ducting
- Full dimensions at back of this catalogue
- 5-Year in-home warranty on hood
- 10-Year in-home warranty on motor

Rangehood + Motor Systems

Amore rangehoods are powered by an external EX-Drive motor. Choose the right one for your kitchen.

Bella 900mm Rangehood 900 EX-Drive Motor™

RRP $1,895

Ideal for normal cooking

Product Code: UMBELLA9-M9

Bella 900mm Rangehood 1600 EX-Drive Motor™

RRP $2,295

Ideal for heavy cooking

Product Code: UMBELLA9-M16

Bella 900mm Rangehood 3200 EX-Drive Motor™

RRP $3,295

Ideal for extreme cooking

Product Code: UMBELLA9-M32

Optional Accessories

Enhance your system with these add-ons.

DuraDuct 200mm Ducting (5m)

RRP $299

Product Code: DURA200

Bella 900mm Baffles (Set of 3)

RRP $34.50 (Each Baffle)

Product Code: BELLA9BAF

Bella

600mm Undermount Rangehood

The Bella 600mm wide undermount rangehood is designed with a deeper profile than the Lucia model to improve extraction performance. Perfect for cooktops up to 600mm wide, it blends seamlessly into your kitchen cabinetry and can be matched with a motor to suit your cooking style.

Specifications

- Quiet operation with external motor
- Expel smoke, grease, smells & steam outside
- Easy control with soft-touch eye-level controls
- Great control with 5-speed levels
- 15-minute delay timer with auto shut-off
- Twin LED lights give you great stovetop lighting
- Sturdy hood made of 1mm 430 stainless steel
- Stainless steel dishwasher-safe filters
- Dimensions: 600mm wide x 390mm deep
- Includes 5m ducting
- Full dimensions at back of this catalogue
- 5-Year in-home warranty on hood
- 10-Year in-home warranty on motor

Rangehood + Motor Systems

Amore rangehoods are powered by an external EX-Drive motor. Choose the right one for your kitchen.

Bella 600mm Rangehood 900 EX-Drive Motor™

RRP $1,775

Ideal for normal cooking

Product Code: UMBELLA6-M9

Bella 600mm Rangehood 1600 EX-Drive Motor™

RRP $1,999

Ideal for heavy cooking

Product Code: UMBELLA6-M16

Optional Accessories

Enhance your system with these add-ons.

DuraDuct 200mm Ducting (5m)

RRP $299

Product Code: DURA200

Bella 600mm Baffles (Set of 2)

RRP $34.50 (Each Baffle)

Product Code: BELLA6BAF

Emma

600mm Undermount Rangehood

The Emma 600mm undermount rangehood is suitable for up to a 600mm wide cooktop fitting effortlessly into your kitchen cabinetry and can be matched with a motor tailored to your cooking requirements.

Specifications

- Quiet operation with external motor
- Expel smoke, grease, smells & steam outside
- Easy control with soft-touch eye-level controls
- Great control with 5-speed levels
- 15-minute delay timer with auto shut-off
- Twin LED lights give you great stovetop lighting
- Sturdy hood made of 1mm 430 stainless steel
- Stainless steel dishwasher-safe filters
- Remote control for optimum convenience
- Dimensions: 602mm wide x 360mm deep
- Includes 5m ducting
- Full dimensions at back of this catalogue
- 5-Year in-home warranty on hood
- 10-Year in-home warranty on motor

Rangehood + Motor Systems

Amore rangehoods are powered by an external EX-Drive motor. Choose the right one for your kitchen.

Emma 600mm Rangehood 900 EX-Drive Motor™

RRP $1,800

Ideal for normal cooking

Product Code: UMEMMA6-M9

Emma 600mm Rangehood 1600 EX-Drive Motor™

RRP $2,090

Ideal for heavy cooking

Product Code: UMEMMA6-M16

Optional Accessories

Enhance your system with these add-ons.

DuraDuct 200mm Ducting (5m)

RRP $299

Product Code: DURA200

Emma 600mm Baffle (1)

RRP $34.50

Product Code: EMMA6BAF

Savina

900mm Wall-Mount Rangehood

The Savina 900mm wall-mounted rangehood is perfect for up to a 900mm cooktop. It makes a bold statement with its sleek European design and can be paired with a motor to match your cooking needs.

Specifications

- Quiet operation with external motor
- Expel smoke, grease, smells & steam outside
- Easy control with soft-touch eye-level controls
- Great control with 5-speed levels
- 15-minute delay timer with auto shut-off
- Twin LED lights give you great stovetop lighting
- Sturdy hood made of 1mm 430 stainless steel
- Stainless steel dishwasher-safe filters
- Remote control for optimum convenience
- Dimensions: 900mm wide x 500mm deep
- Includes 5m ducting
- Full dimensions at back of this catalogue
- 5-Year in-home warranty on hood
- 10-Year in-home warranty on motor

Rangehood + Motor Systems

Amore rangehoods are powered by an external EX-Drive motor. Choose the right one for your kitchen.

Savina 900mm Rangehood 900 EX-Drive Motor™

RRP $2,395

Ideal for normal cooking

Product Code: WMSAVINA9-M9

Savina 900mm Rangehood 1600 EX-Drive Motor™

RRP $2,795

Ideal for heavy cooking

Product Code: WMSAVINA9-M16

Savina 900mm Rangehood 3200 EX-Drive Motor™

RRP $3,795

Ideal for extreme cooking

Product Code: WMSAVINA9-M32

Optional Accessories

Enhance your system with these add-ons.

DuraDuct 200mm Ducting (5m)

RRP $299

Product Code: DURA200

Savina 900mm Baffles (Set of 3)

RRP $34.50 (Each Baffle)

Product Code: SAVINA9BAF

Mia

900mm Wall-Mount Rangehood

The Mia 900mm wall-mounted rangehood is suitable for up to a 900mm cooktop. It really stands out in black with its elegant European design and can be paired with a motor to suit your cooking requirements.

Specifications

- Quiet operation with external motor
- Expel smoke, grease, smells & steam outside
- Easy control with soft-touch eye-level controls
- Great control with 5-speed levels
- 15-minute delay timer with auto shut-off
- Twin LED lights give you great stovetop lighting
- Sturdy hood made of 1mm 430 stainless steel
- Stainless steel dishwasher-safe filters
- Remote control for optimum convenience
- Dimensions: 900mm wide x 500mm deep
- Includes 5m ducting
- Full dimensions at back of this catalogue
- 5-Year in-home warranty on hood
- 10-Year in-home warranty on motor

Rangehood + Motor Systems

Amore rangehoods are powered by an external EX-Drive motor. Choose the right one for your kitchen.

Mia 900mm Rangehood 900 EX-Drive Motor™

RRP $2,395

Ideal for normal cooking

Product Code: WMMIA9B-M9

Mia 900mm Rangehood 1600 EX-Drive Motor™

RRP $2,795

Ideal for heavy cooking

Product Code: WMMIA9B-M16

Mia 900mm Rangehood 3200 EX-Drive Motor™

RRP $3,795

Ideal for extreme cooking

Product Code: WMMIA9B-M32

Optional Accessories

Enhance your system with these add-ons.

DuraDuct 200mm Ducting (5m)

RRP $299

Product Code: DURA200

Mia 900mm Baffles (Set of 3)

RRP $34.50 (Each Baffle)

Product Code: MIA9BAF

Giulia

900mm Wall-Mount Rangehood

The Giulia 900mm wall-mounted rangehood is suitable for up to a 900mm cooktop. With angled sleek lines it will fit into your kitchen seamlessly and can be paired with a motor to suit your cooking requirements.

Specifications

- Quiet operation with external motor
- Expel smoke, grease, smells & steam outside
- Easy control with soft-touch eye-level controls
- Great control with 5-speed levels
- 15-minute delay timer with auto shut-off
- Twin LED lights give you great stovetop lighting
- Sturdy hood made of 1mm 430 stainless steel
- Stainless steel dishwasher-safe filters
- Remote control for optimum convenience
- Dimensions: 900mm wide x 500mm deep
- Includes 5m ducting
- Full dimensions at back of this catalogue
- 5-Year in-home warranty on hood
- 10-Year in-home warranty on motor

Rangehood + Motor Systems

Amore rangehoods are powered by an external EX-Drive motor. Choose the right one for your kitchen.

Giulia 900mm Rangehood 900 EX-Drive Motor™

RRP $2,395

Ideal for normal cooking

Product Code: WMGIULIA9-M9

Giulia 900mm Rangehood 1600 EX-Drive Motor™

RRP $2,795

Ideal for heavy cooking

Product Code: WMGIULIA9-M16

Giulia 900mm Rangehood 3200 EX-Drive Motor™

RRP $3,795

Ideal for extreme cooking

Product Code: WMGIULIA9-M32

Optional Accessories

Enhance your system with these add-ons.

DuraDuct 200mm Ducting (5m)

RRP $299

Product Code: DURA200

Giulia 900mm Baffles (Set of 3)

RRP $34.50 (Each Baffle)

Product Code: GIULIA9BAF

F5

Martina

900mm Wall-Mount Rangehood

The Martina 900mm wall-mounted rangehood is suitable for up to a 900mm cooktop. With its black angled sleek lines it will fit into your kitchen seamlessly and can be paired with a motor to suit your cooking requirements.

Specifications

- Quiet operation with external motor
- Expel smoke, grease, smells & steam outside
- Easy control with soft-touch eye-level controls
- Great control with 5-speed levels
- 15-minute delay timer with auto shut-off
- Twin LED lights give you great stovetop lighting
- Sturdy hood made of 1mm 430 stainless steel
- Stainless steel dishwasher-safe filters
- Remote control giving you better control
- Dimensions: 900mm wide x 500mm deep
- Includes 5m ducting
- Full dimensions at back of this catalogue
- 5-Year in-home warranty on hood
- 10-Year in-home warranty on motor

Rangehood + Motor Systems

Amore rangehoods are powered by an external EX-Drive motor. Choose the right one for your kitchen.

Martina 900mm Rangehood 900 EX-Drive Motor™

RRP $2,495

Ideal for normal cooking

Product Code: WMMARTINA9B-M9

Martina 900mm Rangehood 1600 EX-Drive Motor™

RRP $2,895

Ideal for heavy cooking

Product Code: WMMARTINA9B-M16

Martina 900mm Rangehood 3200 EX-Drive Motor™

RRP $3,895

Ideal for extreme cooking

Product Code: WMMARTINA9B-M32

Optional Accessories

Enhance your system with these add-ons.

DuraDuct 200mm Ducting (5m)

RRP $299

Product Code: DURA200

Martina 900mm Baffles (Set of 3)

RRP $34.50 (Each Baffle)

Product Code: MARTINA9BAF

Mecca

900mm Wall-Mount Rangehood

The Mecca 900mm wall-mounted rangehood is suitable for up to a 900mm cooktop. With its black glass front it will fit into your kitchen seamlessly and can be paired with a motor to suit your cooking requirements.

Specifications

- Quiet operation with external motor
- Expel smoke, grease, smells & steam outside
- Easy control with soft-touch eye-level controls
- Great control with 5-speed levels
- 15-minute delay timer with auto shut-off
- Single Strip LED light give you great stovetop lighting
- Sturdy hood made of 1mm 430 stainless steel
- Stainless steel dishwasher-safe filters
- Dimensions: 900mm wide x 500mm deep
- Includes 5m ducting
- Full dimensions at back of this catalogue
- 5-Year in-home warranty on hood
- 10-Year in-home warranty on motor

Rangehood + Motor Systems

Amore rangehoods are powered by an external EX-Drive motor. Choose the right one for your kitchen.

Mecca 900mm Rangehood 900 EX-Drive Motor™

RRP $1,999

Ideal for normal cooking

Product Code: WMMECCA9-M9

Mecca 900mm Rangehood 1600 EX-Drive Motor™

RRP $2,595

Ideal for heavy cooking

Product Code: WMMECCA9-M16

Mecca 900mm Rangehood 3200 EX-Drive Motor™

RRP $3,595

Ideal for extreme cooking

Product Code: WMMECCA9-M32

Optional Accessories

Enhance your system with these add-ons.

DuraDuct 200mm Ducting (5m)

RRP $299

Product Code: DURA200

Carla

600mm Wall-Mount Rangehood

The Carla 600mm wall-mounted rangehood is suitable for up to a 600mm cooktop. The Carla is great for smaller spaces and can be paired with a motor to suit your cooking requirements.

Specifications

- Quiet operation with external motor
- Expel smoke, grease, smells & steam outside
- Easy control with soft-touch eye-level controls
- Great control with 5-speed levels
- 15-minute delay timer with auto shut-off
- Twin LED lights give you great stovetop lighting
- Sturdy hood made of 1mm 430 stainless steel
- Stainless steel dishwasher-safe filters
- Remote control for optimum convenience
- Dimensions: 600mm wide x 450mm deep
- Includes 5m ducting
- Full dimensions at back of this catalogue
- 5-Year in-home warranty on hood
- 10-Year in-home warranty on motor

Rangehood + Motor Systems

Amore rangehoods are powered by an external EX-Drive motor. Choose the right one for your kitchen.

Carla 600mm Rangehood 900 EX-Drive Motor™

RRP $1,995

Ideal for normal cooking

Product Code: WMCARLA6-M9

Carla 600mm Rangehood 1600 EX-Drive Motor™

RRP $2,195

Ideal for heavy cooking

Product Code: WMCARLA6-M16

Optional Accessories

Enhance your system with these add-ons.

DuraDuct 200mm Ducting (5m)

RRP $299

Product Code: DURA200

Carla 600mm Baffles (Set of 2)

RRP $34.50 (Each Baffle)

Product Code: CARLA6BAF

Serena

900mm Island-Mount Rangehood

The Serena 900mm wide island-mounted rangehood is perfect for a 900mm cooktop positioned on an island and can be paired with a motor to suit your cooking requirements.

Rangehood + Motor Systems

Amore rangehoods are powered by an external EX-Drive motor. Choose the right one for your kitchen.

Specifications

- Quiet operation with external motor
- Expel smoke, grease, smells & steam outside
- Easy control with soft-touch eye-level controls
- Great control with 5-speed levels
- 15-minute delay timer with auto shut-off
- Four LED lights give you great stovetop lighting
- Sturdy hood made of 1mm 430 stainless steel
- Stainless steel dishwasher-safe filters
- Remote control for optimum convenience
- Dimensions: 900mm wide x 500mm deep
- Includes 5m ducting
- Full dimensions at back of this catalogue
- 5-Year in-home warranty on hood
- 10-Year in-home warranty on motor

Serena 900mm Rangehood 1600 EX-Drive Motor™

RRP $3,695

Ideal for normal cooking

Product Code: IMSERENA9-M16

Serena 900mm Rangehood 3200 EX-Drive Motor™

RRP $4,295

Ideal for heavy cooking

Product Code: IMSERENA9-M32

Optional Accessories

Enhance your system with these add-ons.

DuraDuct 200mm Ducting (5m)

RRP $299

Product Code: DURA200

Serena 900mm Baffles (Set of 3)

RRP $34.50 (Each Baffle)

Product Code: SERENA9BAF

Ella

700mm Island-Mount Rangehood

The Ella 700mm wide island-mounted rangehood is perfect for a 600mm cooktop positioned on an island and can be paired with a motor to suit your cooking requirements.

Rangehood + Motor Systems

Amore rangehoods are powered by an external EX-Drive motor. Choose the right one for your kitchen.

Specifications

- Quiet operation with external motor
- Expel smoke, grease, smells & steam outside
- Easy control with soft-touch eye-level controls
- Great control with 5-speed levels
- 15-minute delay timer with auto shut-off
- Four LED lights give you great stovetop lighting
- Sturdy hood made of 1mm 430 stainless steel
- Stainless steel dishwasher-safe filters
- Dimensions: 700mm wide x 400mm deep
- Includes 5m ducting
- Full dimensions at back of this catalogue
- 5-Year in-home warranty on hood
- 10-Year in-home warranty on motor

Ella 700mm Rangehood 1600 EX-Drive Motor™

RRP $2,250

Ideal for normal cooking

Product Code: IMELLA7-M16

Ella 700mm Rangehood 3200 EX-Drive Motor™

RRP $3,250

Ideal for heavy cooking

Product Code: IMELLA7-M32

Optional Accessories

Enhance your system with these add-ons.

DuraDuct 200mm Ducting (5m)

RRP $299

Product Code: DURA200

Eva

1200mm Ceiling Mount Rangehood

The Eva 1200mm wide ceiling-mounted rangehood is perfect for a 1200mm cooktop positioned on an island and can be paired with a motor to suit your cooking requirements.

Rangehood + Motor Systems

Amore rangehoods are powered by an external EX-Drive motor. Choose the right one for your kitchen.

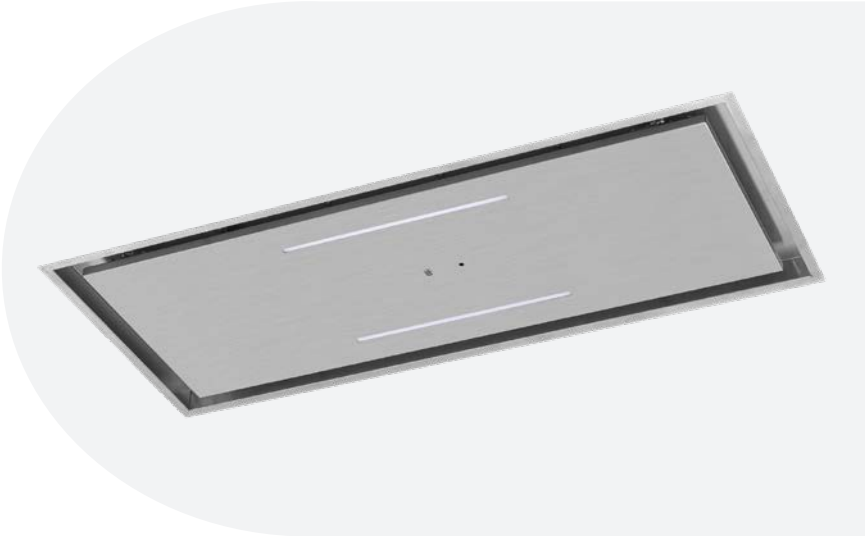

Specifications

- Quiet operation with external motor
- Expel smoke, grease, smells & steam outside
- Easy control with remote control
- Great control with 5-speed levels
- 15-minute delay timer with auto shut-off
- Twin LED lights give you great stovetop lighting
- Sturdy hood made of 1mm 430 stainless steel
- Stainless steel dishwasher-safe filters
- Remote control for optimum convenience
- Dimensions: 1200mm wide x 400mm deep
- Includes 5m ducting
- Full dimensions at back of this catalogue
- 5-Year in-home warranty on hood
- 10-Year in-home warranty on motor

Eva 1200mm Rangehood 1600 EX-Drive Motor™

RRP $2,995

Ideal for normal cooking

Product Code: CMEVA12-M16

Eva 1200mm Rangehood 3200 EX-Drive Motor™

RRP $3,695

Ideal for heavy cooking

Product Code: CMEVA12-M32

Optional Accessories

Enhance your system with these add-ons.

DuraDuct 200mm Ducting (5m)

RRP $299

Product Code: DURA200

Amaria

1200mm BBQ Wall-Mount Rangehood

The Amaria 1200mm wall-mounted rangehood is suitable for up to a 1200mm cooktop and BBQ. With angled sleek lines it will fit into your kitchen seamlessly and can be paired with a motor to suit your cooking requirements.

Rangehood + Motor Systems

Amore rangehoods are powered by an external EX-Drive motor. Choose the right one for your kitchen.

Specifications

- Quiet operation with external motor
- Expel smoke, grease, smells & steam outside
- Easy control with soft-touch eye-level controls
- Great control with 5-speed levels
- 15-minute delay timer with auto shut-off
- Six LED lights give you great stovetop lighting
- Sturdy hood made of 1mm 430 stainless steel
- Stainless steel dishwasher-safe filters
- Dimensions: 1200mm wide x 700mm deep
- Includes 5m ducting
- Full dimensions at back of this catalogue
- 5-Year in-home warranty on hood
- 10-Year in-home warranty on motor

Amaria 1200mm Rangehood 1600 EX-Drive Motor™

RRP $3,295

Ideal for heavy cooking

Product Code: WMAMARIA12-M16

Amaria 1200mm Rangehood 3200 EX-Drive Motor™

RRP $3,999

Ideal for extreme cooking

Product Code: WMAMARIA12-M32

Optional Accessories

Enhance your system with these add-ons.

DuraDuct 200mm Ducting (5m)

RRP $299

Product Code: DURA200

Aunties, Nonnas, Mothers, and Grandchildren dance through the kitchen preparing a family feast, the air hums with life.

The clatter of pans, the rustle of fresh basil, the tender rolling of handmade pasta. Children sneaking bites from the counter. Stories are told, secrets whispered, laughter rises like Nonna's famous ragu simmering on the stove.

Generations gather, hands move with love, shaping every meal into a memory, hearts fill - every kitchen telling its own love story.

Amore Rangehoods – "Quiet enough for whispers. Powerful enough for feasts."

- That's Amore

German precision motors you'll love

Amore's **EX-Drive™** external motors are expertly engineered in Germany to deliver both powerful extraction and quiet performance. Designed to withstand New Zealand's demanding outdoor environments, they come with the assurance of a 10-year warranty. Motors are available in three sizes to suit your cooking needs. Select the option below that best fits your cooking style.

Amore 900

Normal Cooking

- **900 m3/hr airflow**
- **Energy efficient German made EX-Motor**
- **The motor housing is crafted from ASA, one of the most durable plastics for direct sunlight exposure**
- **200mm flexi ducting (5m), solid roof extension pipe and bell housing adapter included with motor.**
- **Installation: Roof & Wall**
- **Warranty - 10 Years**
- **Product code: AM900**

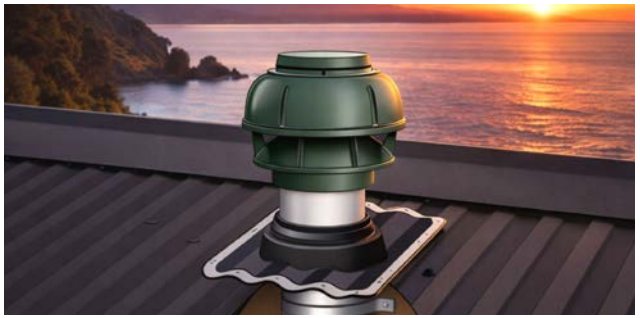

Amore 1600

Heavy Cooking

- **1600 m3/hr airflow**
- **Energy efficient German made EX-Motor**
- **Motor housing is powder-coated galvanized steel, which can be painted**
- **200mm flexi ducting (5m), solid roof extension pipe and bell housing adapter included with motor.**
- **Installation: Roof & Wall (Wall Mount will need hanging bracket)**
- **Warranty - 10 Years**
- **Product code: AM1600**

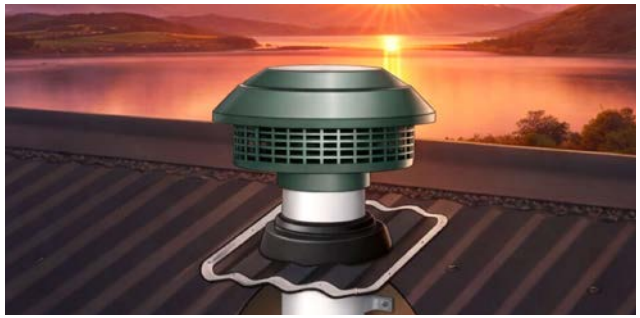

Amore 3200

Extreme Cooking

- **3200 m3/hr airflow**
- **Energy efficient German made EX-Motor**
- **Motor housing is powder-coated galvanized steel, which can be painted**
- **250mm flexi ducting (5m), solid roof extension pipe and bell housing adapter included with motor.**
- **Installation types: Roof**
- **Warranty - 10 Years**
- **Product code: AM3200**

Motor Dimensions

EX-DRIVE™

MOTORS MADE IN GERMANY

Amore 900 EX-Drive Motor™

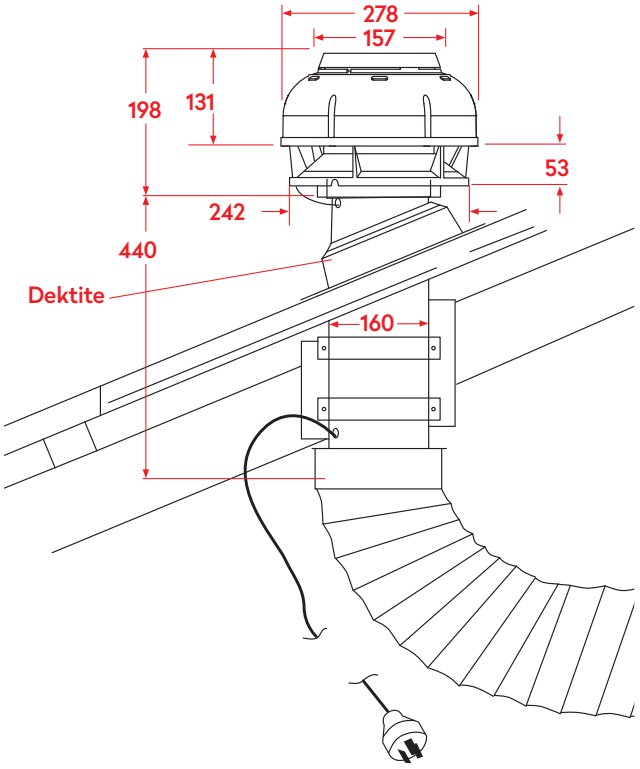

Amore 1600 EX-Drive Motor™

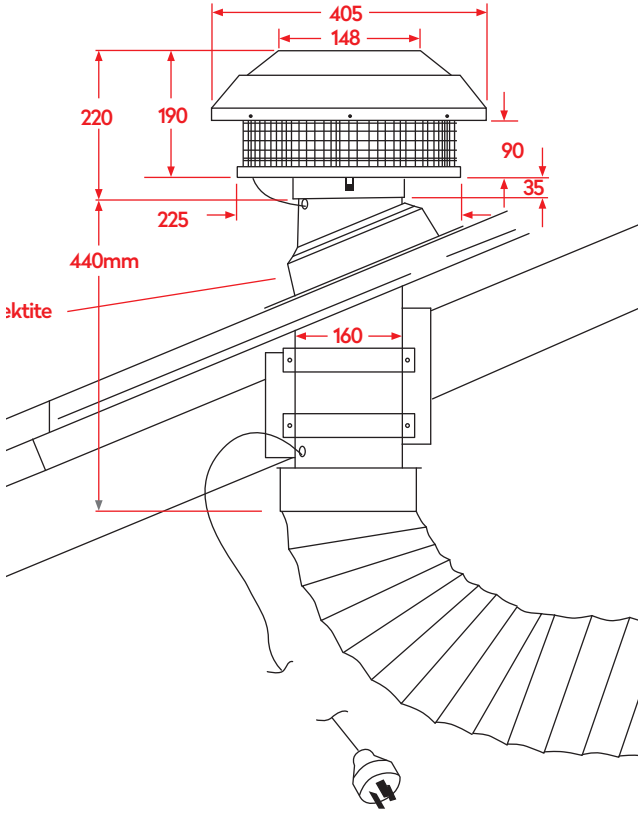

Amore 3200 EX-Drive Motor™

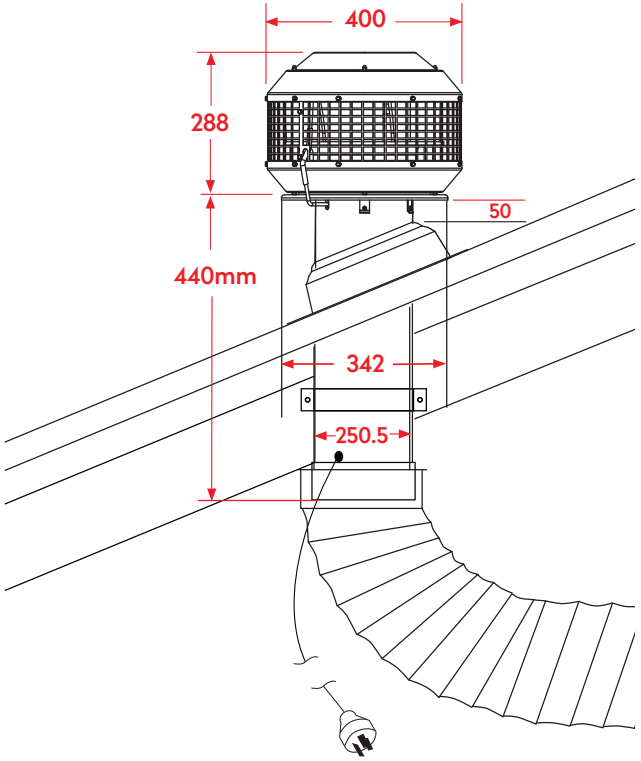

Hood Dimensions

Lucia 600mm Undermount

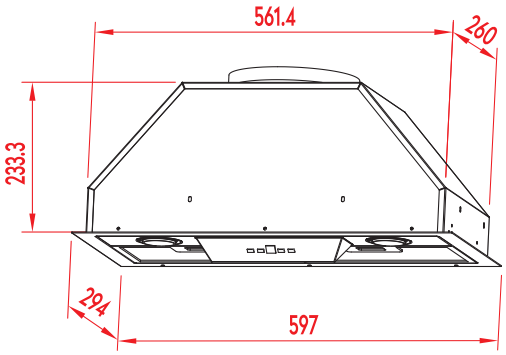

Emma 600mm Undermount

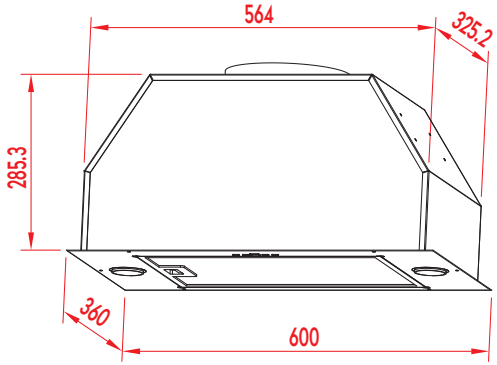

Sofia 750mm Undermount

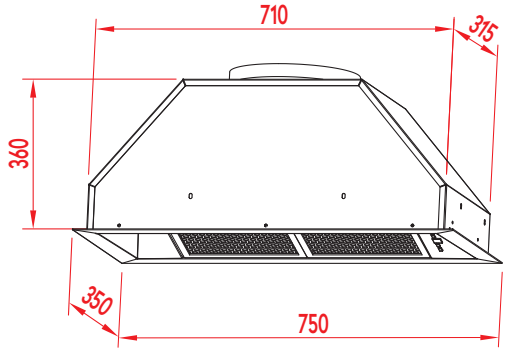

Lucia 900mm Undermount

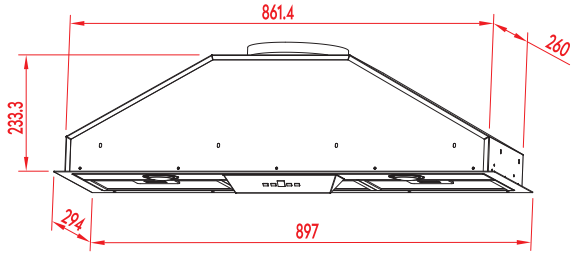

Sofia 600mm Undermount

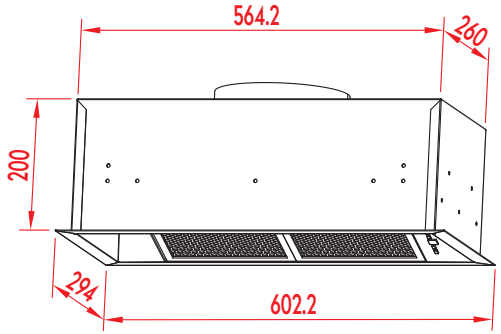

Sofia 900mm Undermount

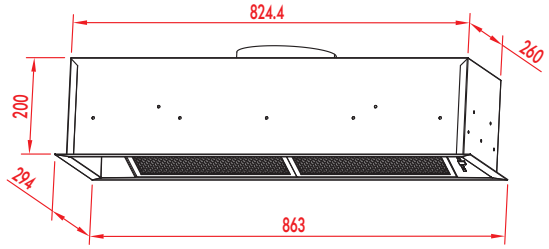

Valentina 600mm Undermount

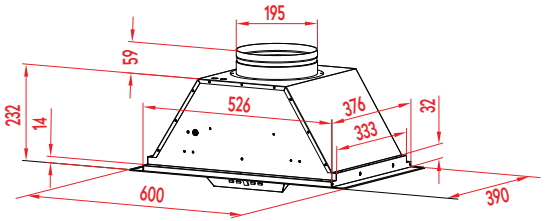

Valentina 900mm Undermount

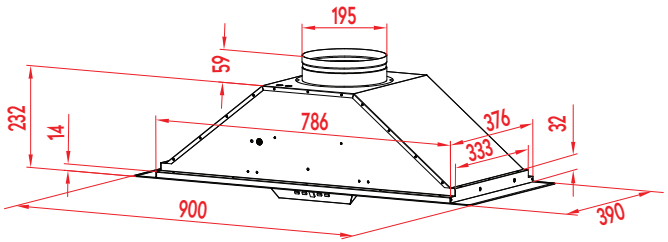

Valentina 1200mm Undermount

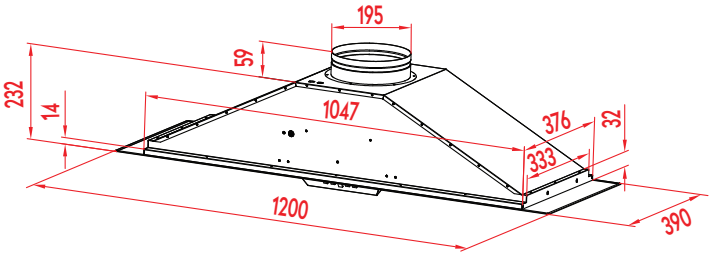

Bella 600mm Undermount

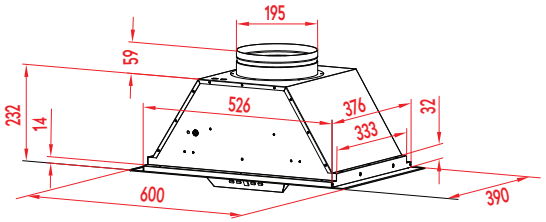

Bella 900mm Undermount

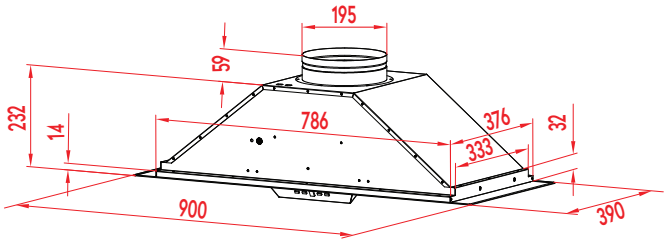

Bella 1200mm Undermount

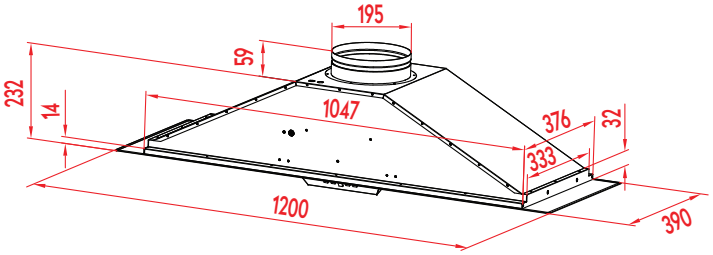

Nova 600mm Undermount

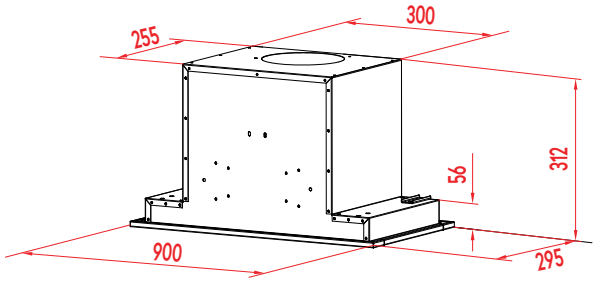

Savina 900mm Wall-Mount

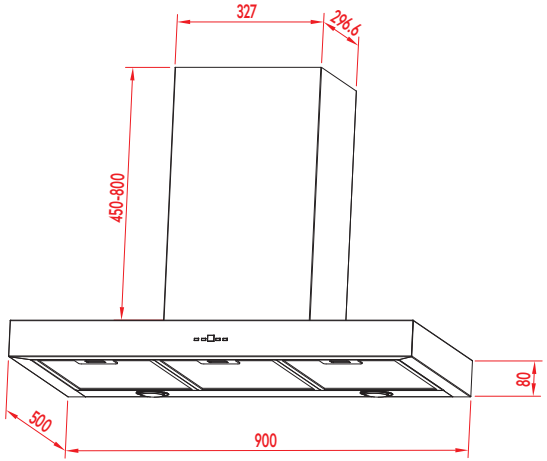

Giulia 900mm Wall-Mount

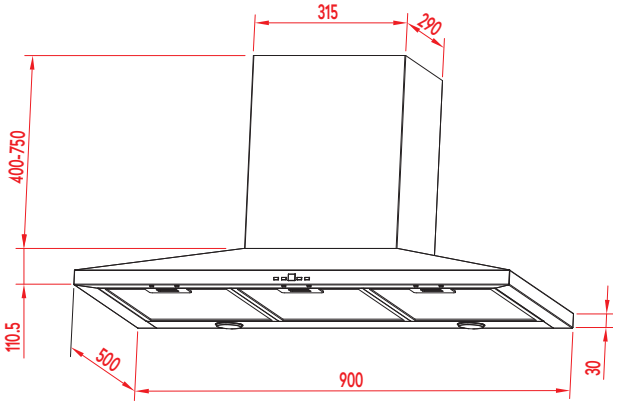

Eva 1200mm Ceiling Mount

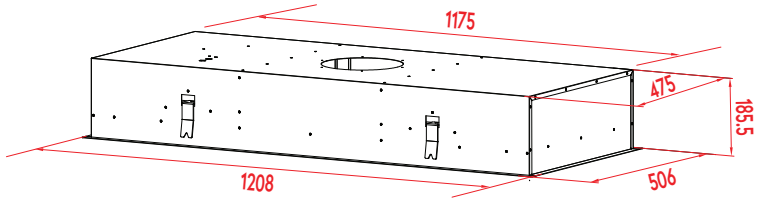

Mia 900mm Wall-Mount

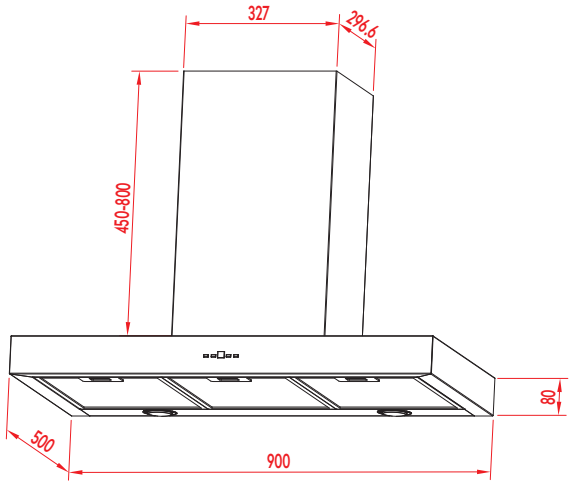

Martina 900mm Wall-Mount

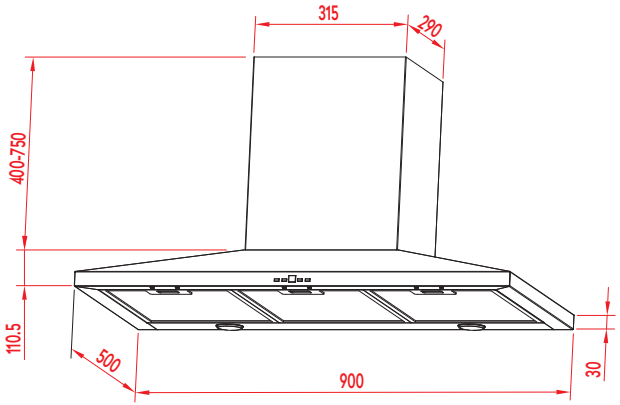

Mecca 900mm Wall-Mount

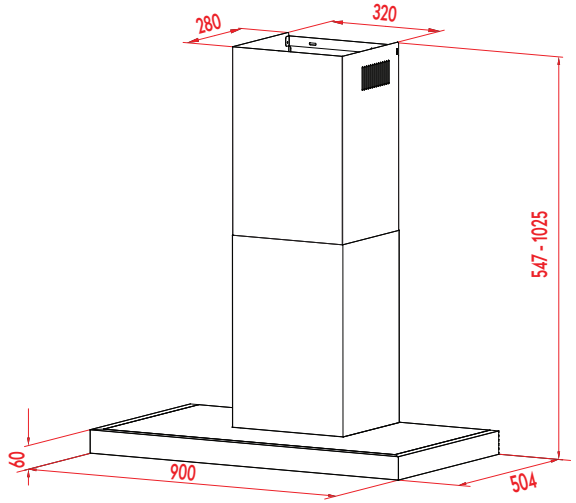

Carla 600mm Wall-Mount

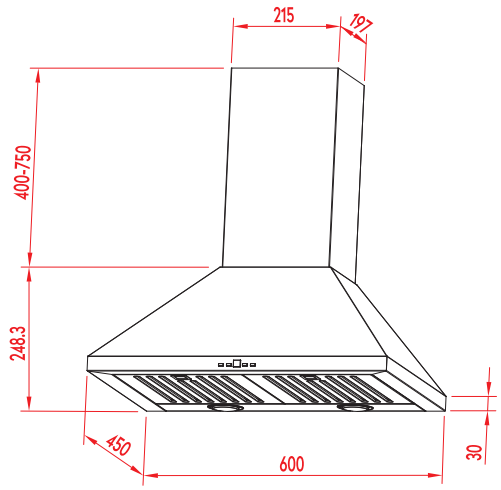

Serena 900mm Island-Mount

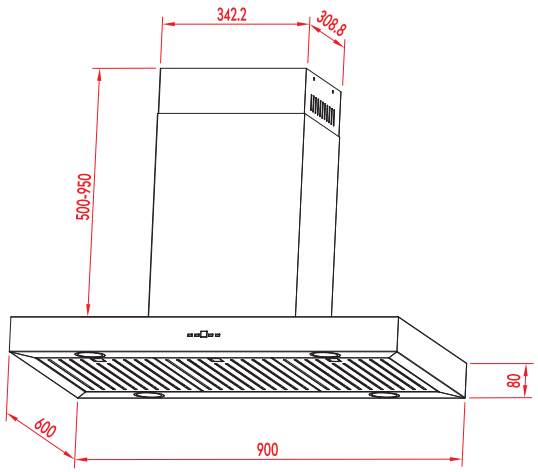

Amaria 1200mm Wall-Mount

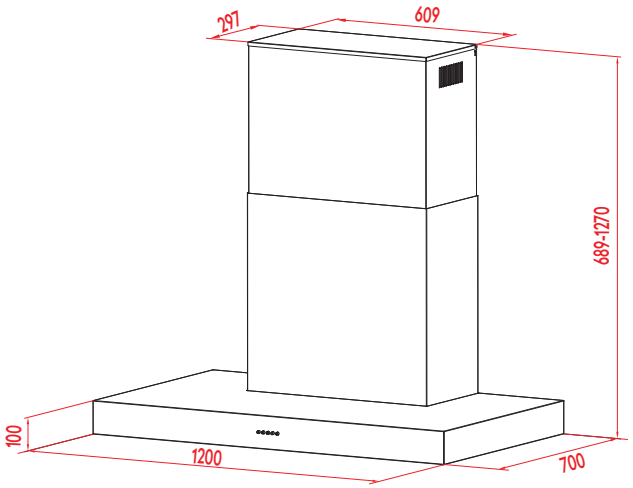

Ella 700mm Island-Mount

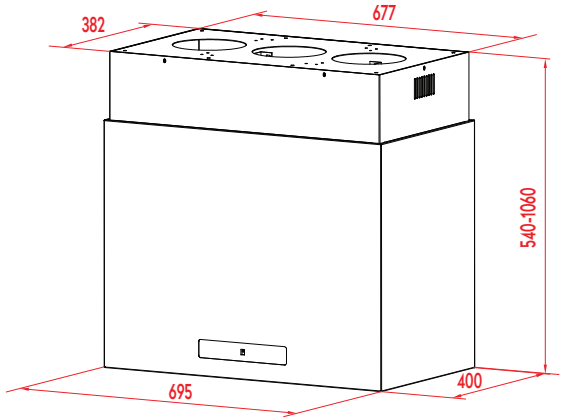

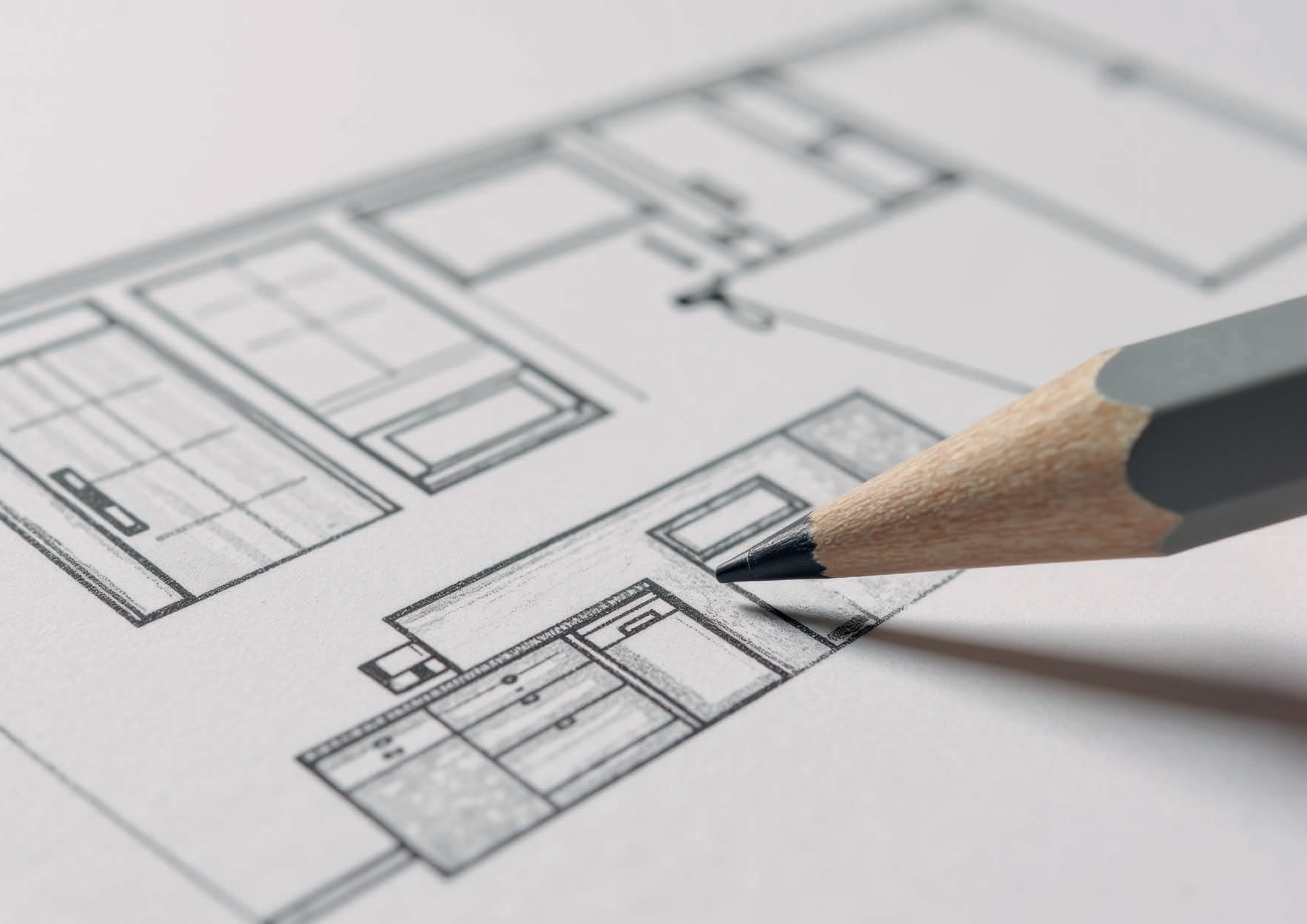

Things to consider when choosing your Amore Rangehood

What width should my rangehood be?

Where possible, ensure the rangehood is the same or greater width than the cooktop. This will help capture the smoke and steam generated from the cooktop.

Good

Rangehood not wide enough

Better

Rangehood same width as cooktop

Best

Rangehood wider than cooktop

What depth should the overhead cabinet be?

When installing an undermount rangehood into overhead cabinetry it is important to consider the depth of the cabinet and the position of the rangehood in the cabinet.

The wider the overhead cabinetry, the better the hood can capture the smoke and steam created by the cook top.

Also important is to position the hood towards the front of the cabinet, which will create a better suction area for the smoke and steam to be captured by the hood.

What is the recommended height between cooktop and rangehood?

It is important to make sure your rangehood is between the minimum and maximum heights from the cooktop.

The maximum height guarantees the rangehood can capture all the smoke and steam generated at the cooktop.

The minimum height makes sure that heat from the cooktop is safe to enter the rangehood.

800mm

Maximum height of rangehood above cooktop

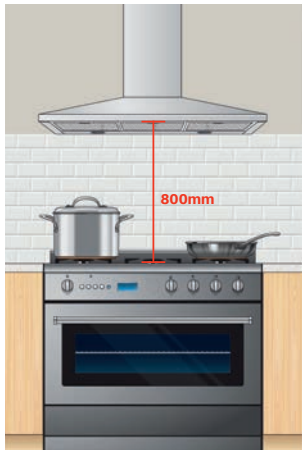

650mm

Minimum height of rangehood above cooktop

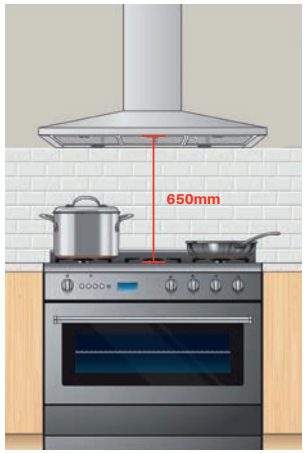

Spare Parts

DuraDuct 150mm - 5m Length
For AM600 Motor
RRP $249
Product Code: DURA150

DuraDuct 200mm- 5m Length
For AM900 and AM1600 Motors
RRP $299
Product Code: DURA200

Flexi-Duct 200mm- 5m Length
For AM900 and AM1600 Motors
RRP $106
Product Code: SCP1070

Flexi-Duct 250mm - 3m Length
For AM3200 Motor
RRP $108
Product Code: SCP2015

Back Draft Shutter 200mm
For AM900 and AM1600 Motors
RRP $94
Product Code: AMPBDS200MM

Back Draft Shutter 250mm
For AM3200 Motors
RRP $166
Product Code: AMP2029

Wall Cover Plate 900/1600
For AM900 and AM1600 Motors
RRP $49
Product Code: AMP1108

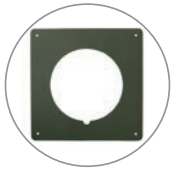

Wall Cover Plate 3200
For AM3200 Motors
RRP $68
Product Code: AMP2025

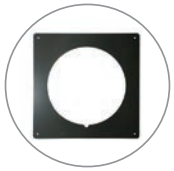

Hanging Bracket 1600
For AM1600 Motors
RRP $29
Product Code: AMP1107

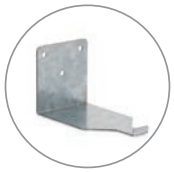

Weather Shield 1600
For AM1600 Motors
RRP $21
Product Code: AMP1104

Weather Shield 3200
For 3200 Motors
RRP $184
Product Code: AMP3200WS

Slotted Pipe 150mm
For AM900 and AM1600 Motors
RRP $130
Product Code: AMP1069

Slotted Pipe 250mm
For AM3200 Motors
RRP $130
Product Code: AMP2026

Duct Joiner 200mm
For AM900 and AM1600 Motors
RRP $45
Product Code: AMP1085

Duct Joiner 250mm
For AM3200 Motors
RRP $54
Product Code: AMP1086

Motor Installation Options

Select the ideal mounting location for your Ex-Drive Motor. Depending on the motor size, Ex-Drive motors can be installed on roofs, walls or eaves.

Roof Mounted EX-Drive Motor

Wall Mounted EX-Drive Motor

Note: Only the Amore 900 and 1600 motors can be mounted on a wall, with the 1600 motor requiring an additional wall hanging bracket.

Tough Ducting

DURA DUCT™

Upgrade to DuraDuct™. Built to last and designed for maximum durability, DuraDuct provides the ultimate in safety, reliability and peace of mind.

Two Stainless Steel Clamps Included

Rodent Resistant

Fire Resistant

Puncture Resistant

Mould Resistant

Easy Installation

10-Year Warranty

10 Reasons to Choose an Amore Rangehood

Do any of these resonate?

Here are 10 Red Flags that tell you your Rangehood isn't cutting it.

1. Grease Test

Does the top of your fridge pass the grease test? Glide your fingers across the top of your fridge. If you get sticky fingers, it's likely a buildup of grease, fats and oils from cooking that your rangehood hasn't extracted.

2. Lingering Smells

Have you ever visited a house where the aroma of yesterday's cooking still lingers in the air?

3. Noise Levels

Have you ever switched on a rangehood and it sounded like a jet engine?

4. Air Quality

Could the air quality in your home be improved?

5. Smoke Alarm Activation

Have you ever found yourself frantically waving a tea towel under a smoke alarm when someone's cooking?

6. Unwanted Condensation

Have you ever found yourself opening windows to clear unwanted condensation after cooking?

7. Noise Avoidance

Do you avoid using your rangehood because it is too noisy?

8. Noise Sensitivity

Are you or is anyone you know sensitive to noise or smells?

9.Opening Windows for Fresh Air

Have you ever had to open windows and air out your home to remove lingering steam, smoke or food odours?

10. Power Inefficiency

Have you ever not used your rangehood because it is not powerful enough to make a difference?

At the heart of a luxury kitchen there's not just great design—but comfort, ambience and practicality.

Amore premium rangehoods combine whisper-quiet operation with powerful air extraction, ensuring your space remains calm, fresh and clean after every cooked meal.

“Some recipes are more than just ingredients — they’re stories, love and legacy passed down through generations. Don’t let noise drown out the moments that matter.

With Amore quiet rangehoods, keep the tradition and the conversation, alive.”

amorě

Sales & Service

For comprehensive Sales, Service and Support, or if you have any questions, please contact Amore.

Phone

0800 200 510

Email

info.parex@whirlpool.com

Hours of business

Monday - Friday
8am - 5pm

Parex Industries

5 Tolich Place, Henderson
Auckland 0610

Home of

insinkerator

Love Your Kitchen

amorehomes.co.nz